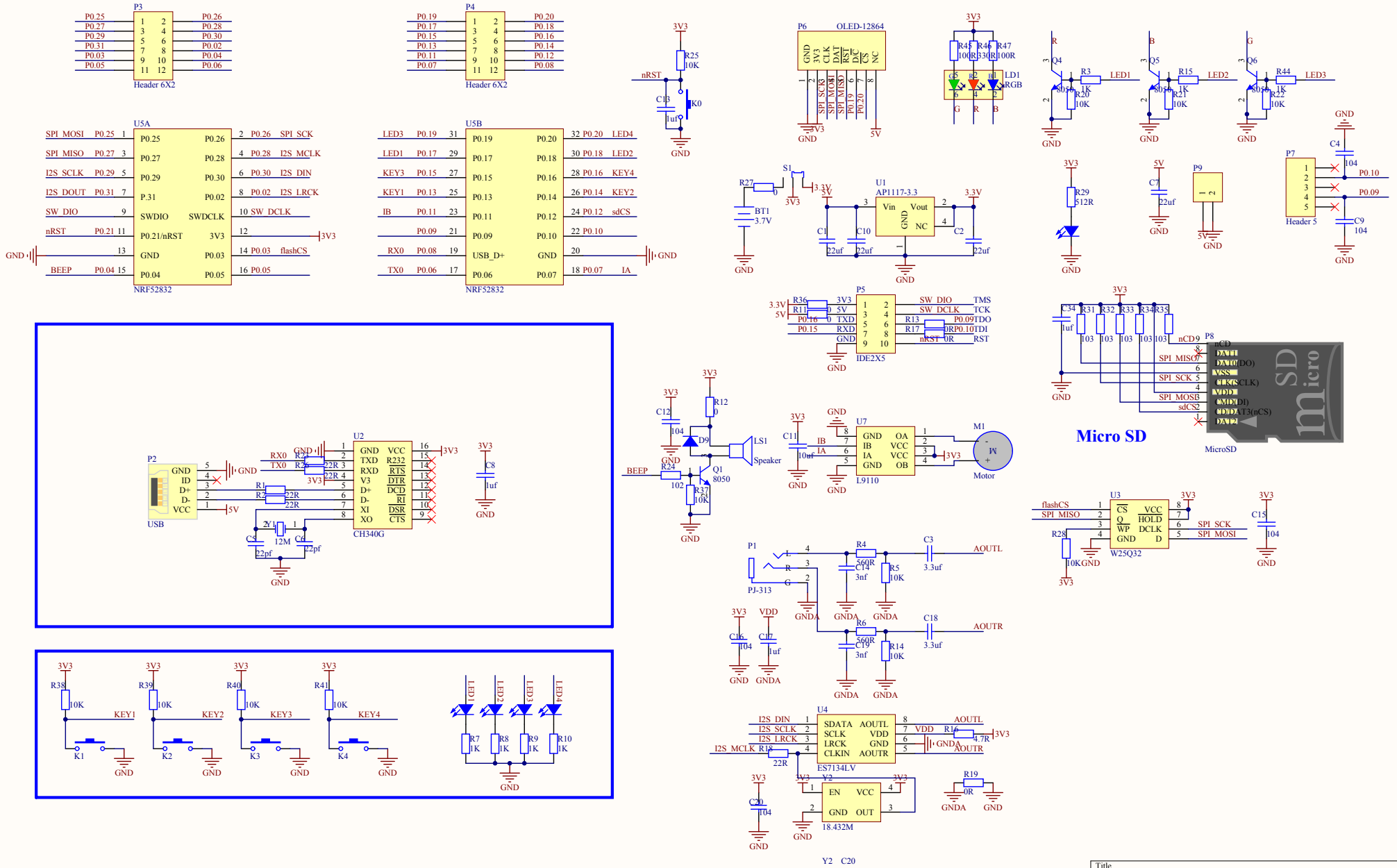
P3
Header 6X2
P4
Header 6X2
U5A
NRF52832
U5B
NRF52832
P6
OLED-12864
LD1
RGB
U1
AP1117-3.3
P5
IDE2X5
P7
Header 5
P8
MicroSD
Micro SD
U2
CH340G
P2
USB
Q1
8050
LS1
Speaker
U7
L9110
M1
Motor
U3
W25Q32
P1
PJ-313
U4
ES7134LV
Y2
18.432M
Y2 C20
Title
Size
A3
Number
Revision
Date: 2017-08-23
Sheet of
File: D:\AD9.4_20170514\..\CC26xx_DK_A2.1.SchDoc
Drawn By: