This document is the exclusive property of Radiius Corp and shall not be reproduced or copied or transformed to any other format without prior permission of Radiius Corp

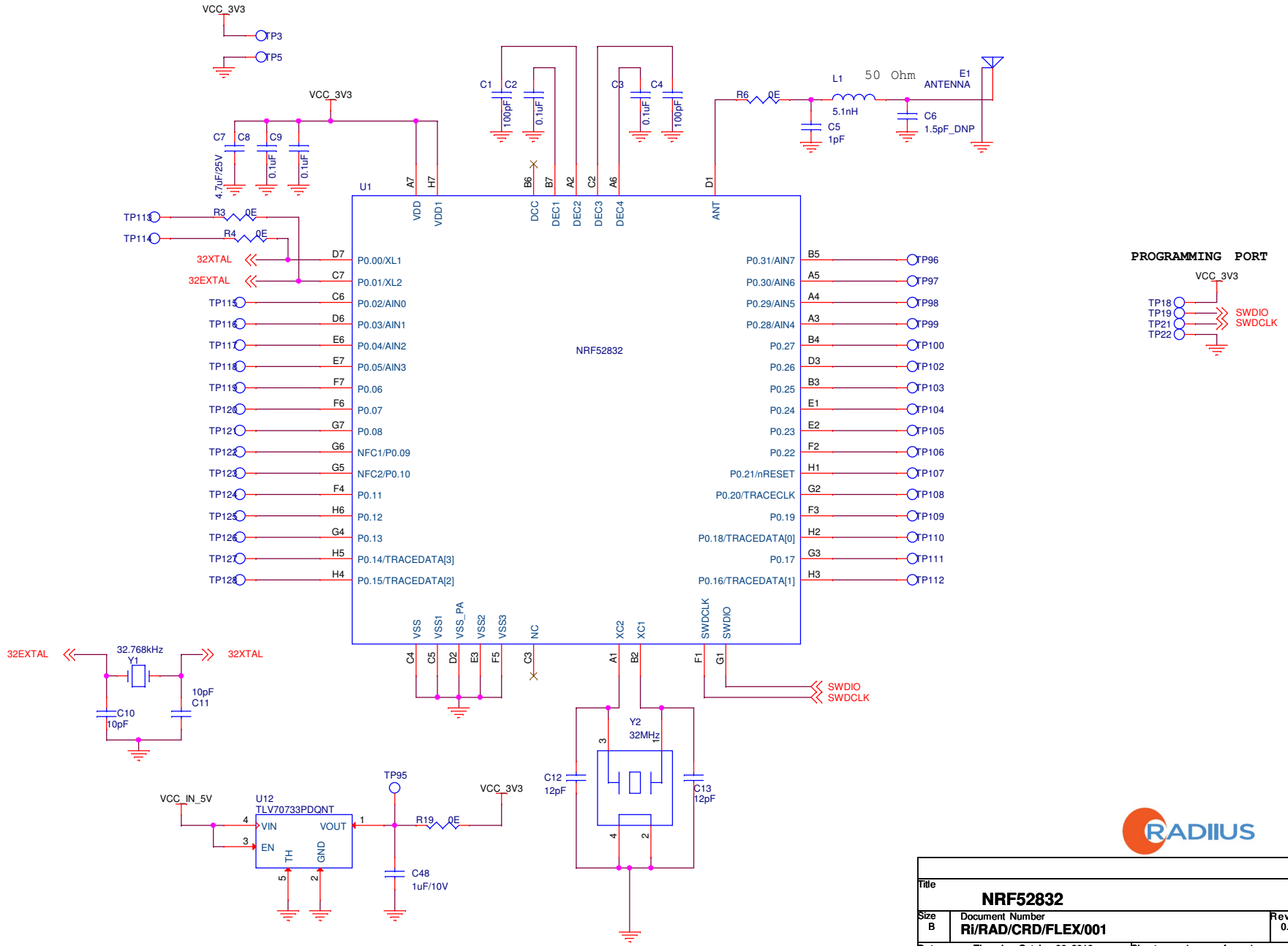

Confidential & Proprietry

Title	NRF52832	
Size B	Document Number Ri/RAD/CRD/FLEX/001	Rev 0.1
Date: Thursday, October 06, 2016	Sheet 1 of 1	