nRF51822

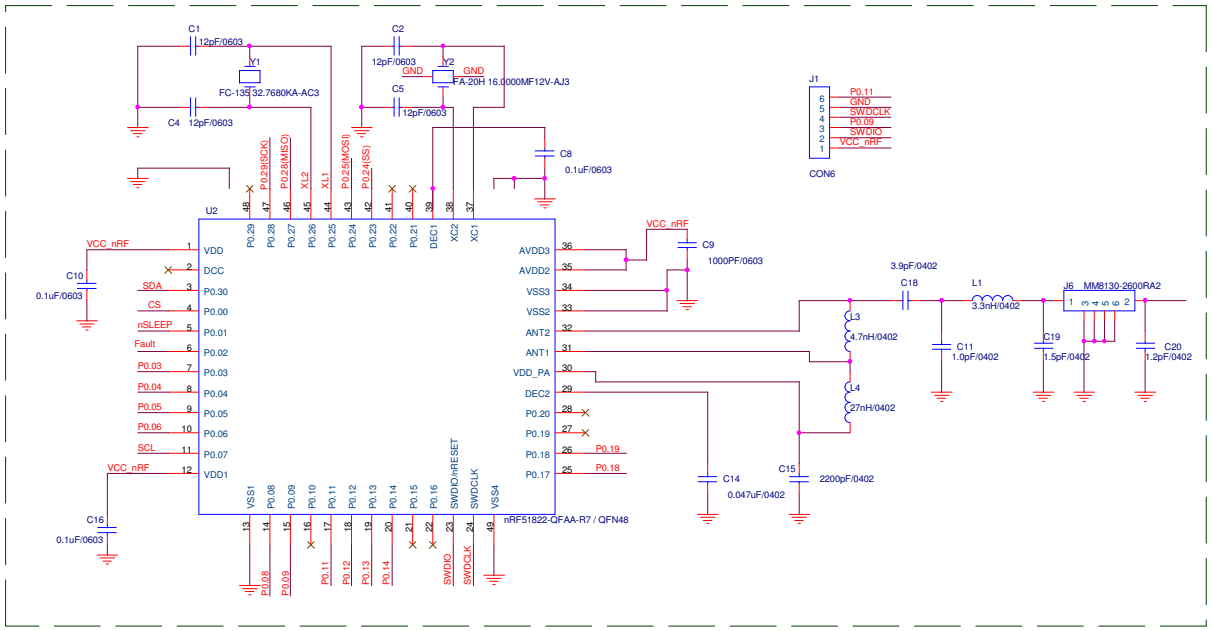

STEPPER DRIVER

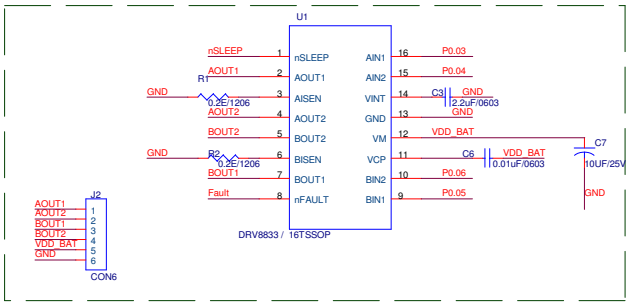

POWER SUPPLY

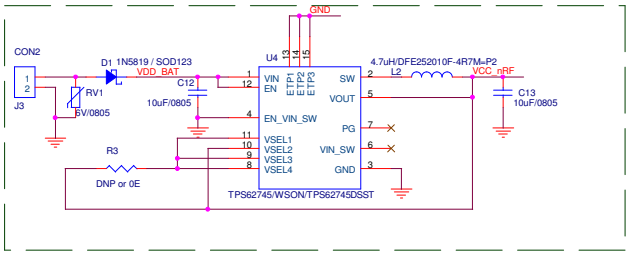

TRICOLOR LED

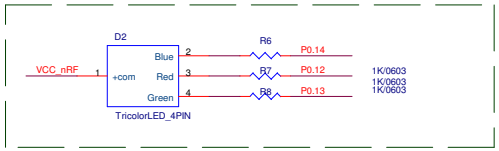

SWITCH

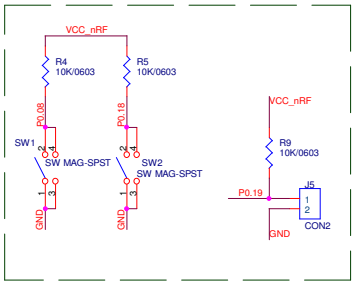

RFID-RC522

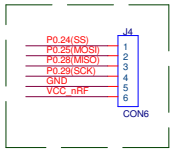

ACCELEROMETER

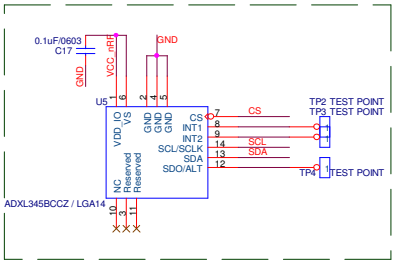

Title <Title>		
Size Custom	Document Number VINR-178	Rev <RevCode>
Date: Wednesday, April 05, 2017	Sheet 1 of 1	