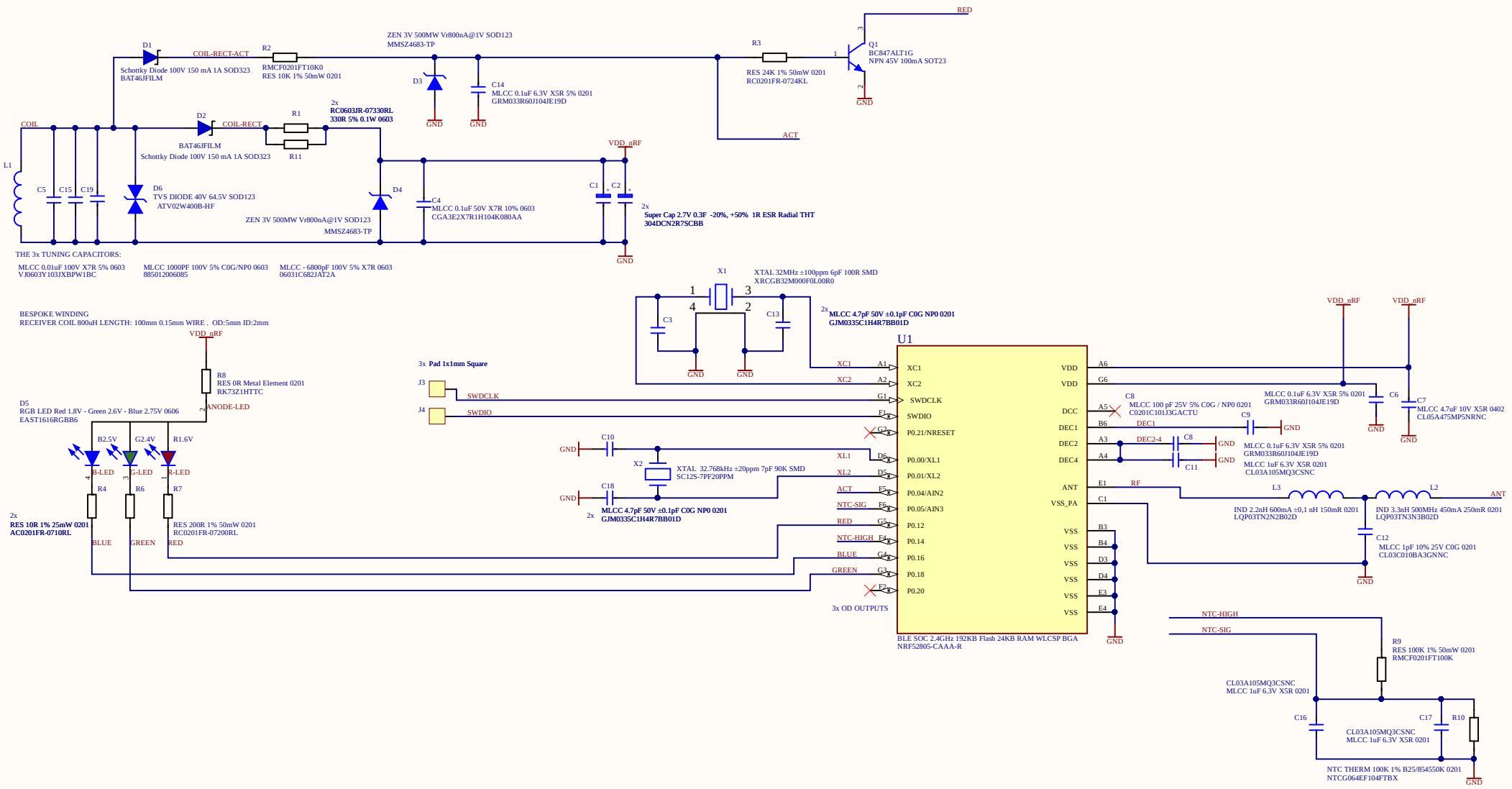

Title **Heatle Rod** **[No Variations]**			HEATLE Motion Lab Bouchéstraße 12/Halle 20 Berlin 12435
Size: A4	Number: *	Revision: R6	
Date: 12/02/2021	Time: 16:18:23	Sheet 1 of 1	
File: C:\Users\james\Google Drive\Induction\R6\Electrical\Altium\Rod\Rod.SchDoc			