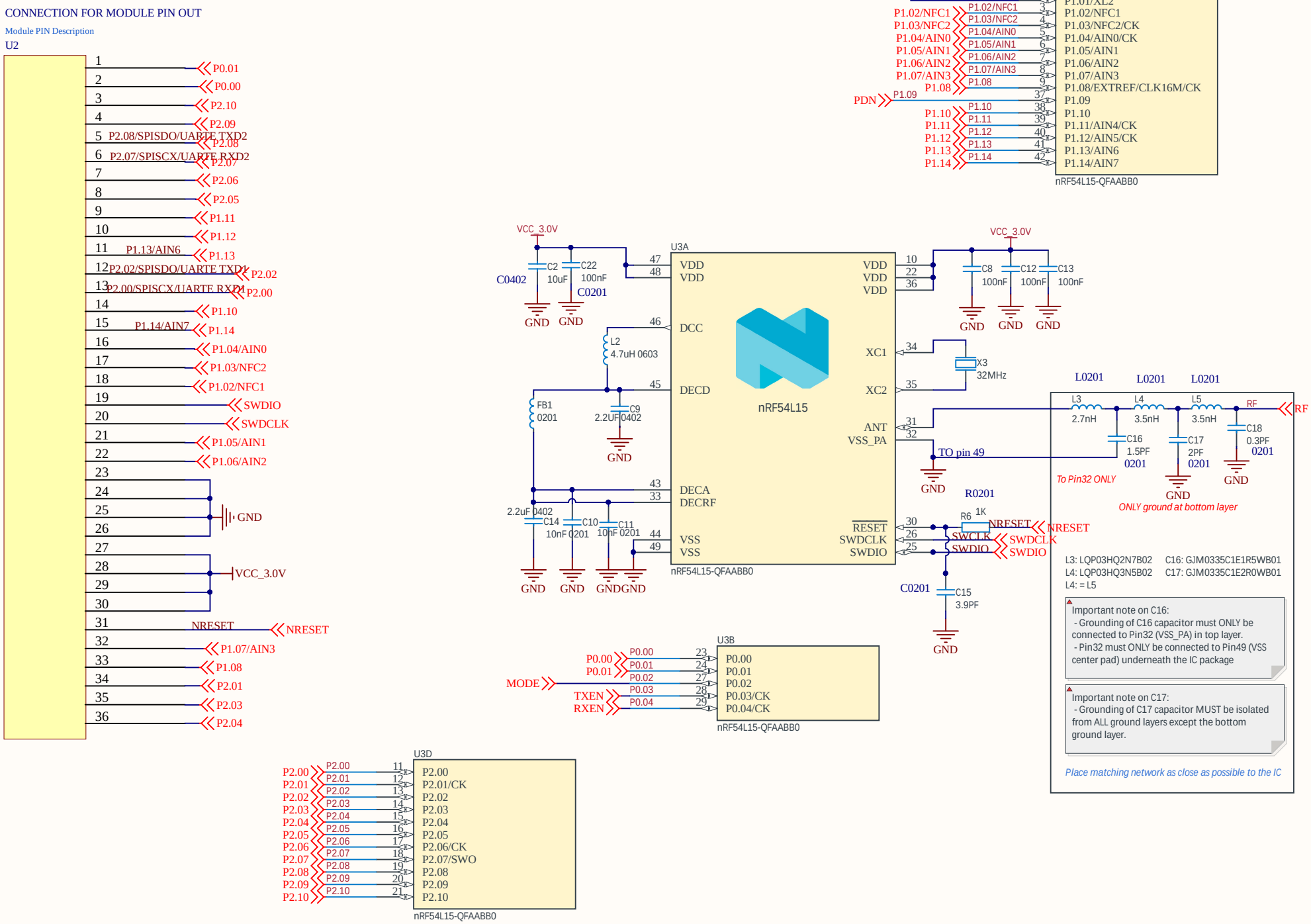
CONNECTION FOR MODULE PIN OUT
Module PIN Description
U2
1 P0.01
2 P0.00
3 P2.10
4 P2.09
5 P2.08/SPISDO/UARTE TXD2 P2.08
6 P2.07/SPISCX/UARTE RXD2 P2.07
7 P2.06
8 P2.05
9 P1.11
10 P1.12
11 P1.13/AIN6 P1.13
12 P2.02/SPISDO/UARTE TXD1 P2.02
13 P2.00/SPISCX/UARTE RXD1 P2.00
14 P1.10
15 P1.14/AIN7 P1.14
16 P1.04/AIN0
17 P1.03/NFC2
18 P1.02/NFC1
19 SWDIO
20 SWDCLK
21 P1.05/AIN1
22 P1.06/AIN2
23
24
25
26
GND
27
28
29
30
VCC_3.0V
31 NRESET NRESET
32 P1.07/AIN3
33 P1.08
34 P2.01
35 P2.03
36 P2.04
U3C
P1.00/XL1
2012
X1
32.768kHz
P1.00/XL1 1 P1.00/XL1
P1.01/XL2 2 P1.01/XL2
P1.02/NFC1 3 P1.02/NFC1
P1.03/NFC2 4 P1.03/NFC2/CK
P1.04/AIN0 5 P1.04/AIN0/CK
P1.05/AIN1 6 P1.05/AIN1
P1.06/AIN2 7 P1.06/AIN2
P1.07/AIN3 8 P1.07/AIN3
P1.08 9 P1.08/EXTREF/CLK16M/CK
PDN P1.09 37 P1.09
P1.10 38 P1.10
P1.11 39 P1.11/AIN4/CK
P1.12 40 P1.12/AIN5/CK
P1.13 41 P1.13/AIN6
P1.14 42 P1.14/AIN7
nRF54L15-QFAABB0
VCC_3.0V
C2 10uF
C22 100nF
C0402
C0201
GND
L2 4.7uH 0603
FB1 0201
C9 2.2UF 0402
U3A
47 VDD
48 VDD
46 DCC
45 DECD
43 DECA
33 DECRF
44 VSS
49 VSS
nRF54L15
10 VDD
22 VDD
36 VDD
34 XC1
35 XC2
31 ANT
32 VSS_PA
30 RESET
26 SWDCLK
25 SWDIO
C8 100nF
C12 100nF
C13 100nF
X3 32MHz
TO pin 49
R0201
R6 1K
NRESET
SWDCLK
SWDIO
C14 10nF 0201
C10 10nF 0201
C11 10nF 0201
C15 3.9PF
L0201
L3 2.7nH
L4 3.5nH
L5 3.5nH
RF
C16 1.5PF 0201
C17 2PF 0201
C18 0.3PF 0201
To Pin32 ONLY
ONLY ground at bottom layer
L3: LQP03HQ2N7B02
L4: LQP03HQ3N5B02
L4: = L5
C16: GJM0335C1E1R5WB01
C17: GJM0335C1E2R0WB01
Important note on C16:
- Grounding of C16 capacitor must ONLY be connected to Pin32 (VSS_PA) in top layer.
- Pin32 must ONLY be connected to Pin49 (VSS center pad) underneath the IC package
Important note on C17:
- Grounding of C17 capacitor MUST be isolated from ALL ground layers except the bottom ground layer.
Place matching network as close as possible to the IC
U3B
P0.00 23 P0.00
P0.01 24 P0.01
MODE P0.02 27 P0.02
TXEN P0.03 28 P0.03/CK
RXEN P0.04 29 P0.04/CK
nRF54L15-QFAABB0
U3D
P2.00 11 P2.00
P2.01 12 P2.01/CK
P2.02 13 P2.02
P2.03 14 P2.03
P2.04 15 P2.04
P2.05 16 P2.05
P2.06 17 P2.06/CK
P2.07 18 P2.07/SWO
P2.08 19 P2.08
P2.09 20 P2.09
P2.10 21 P2.10
nRF54L15-QFAABB0
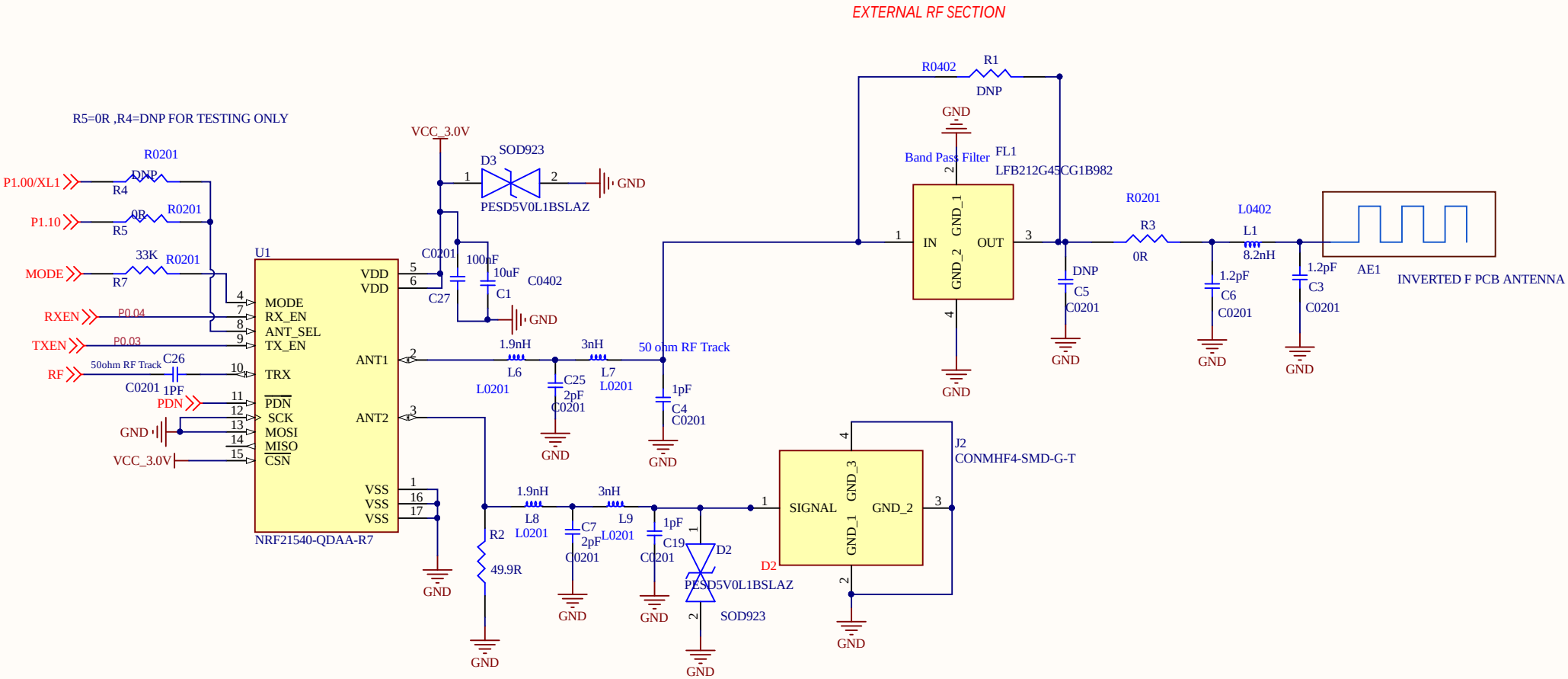
Front End Module _PA/LNA