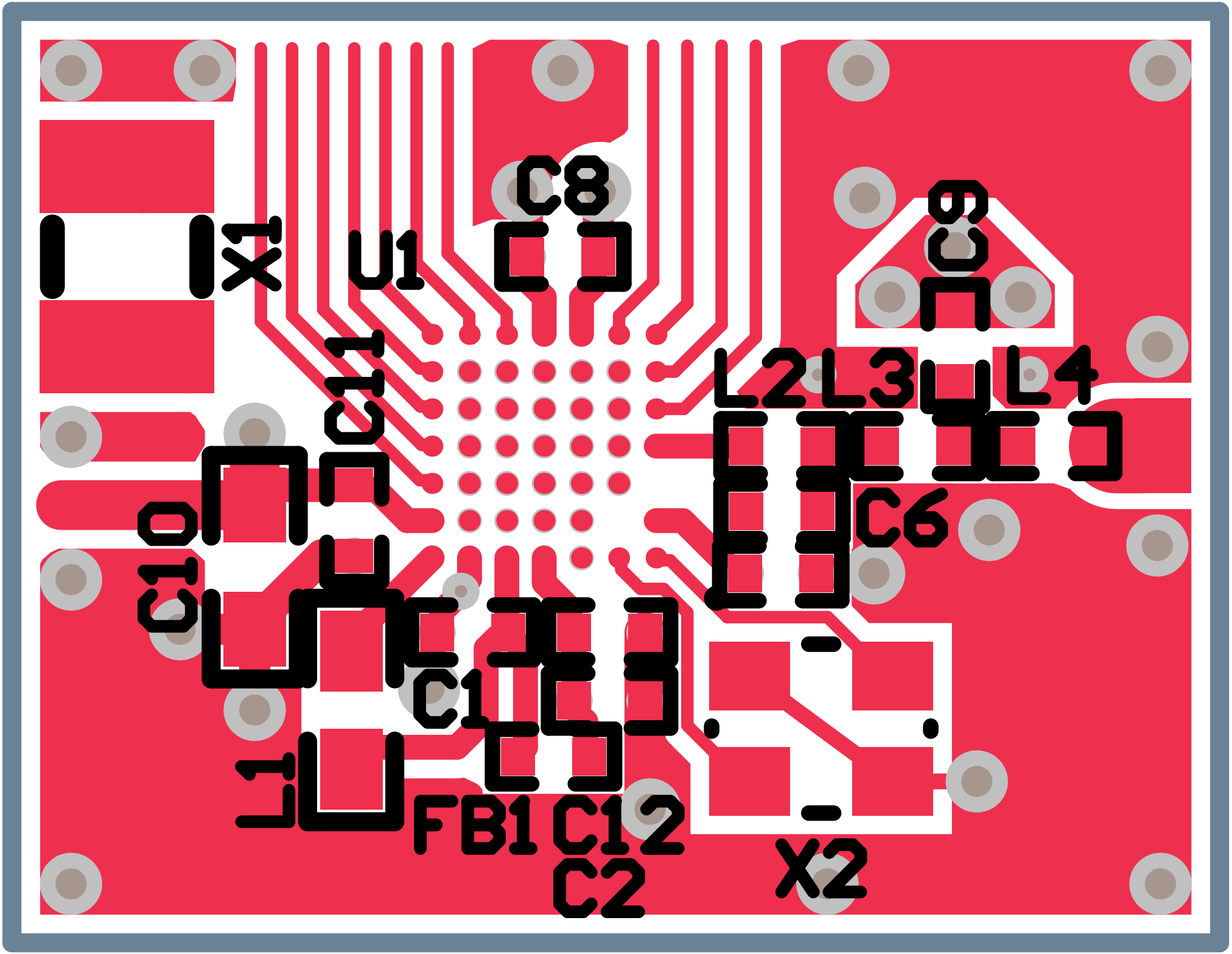
C8
X1
U1
C9
C11
L2
L3
L4
C10
C6
C1
C3
FB1
C12
C2
X2

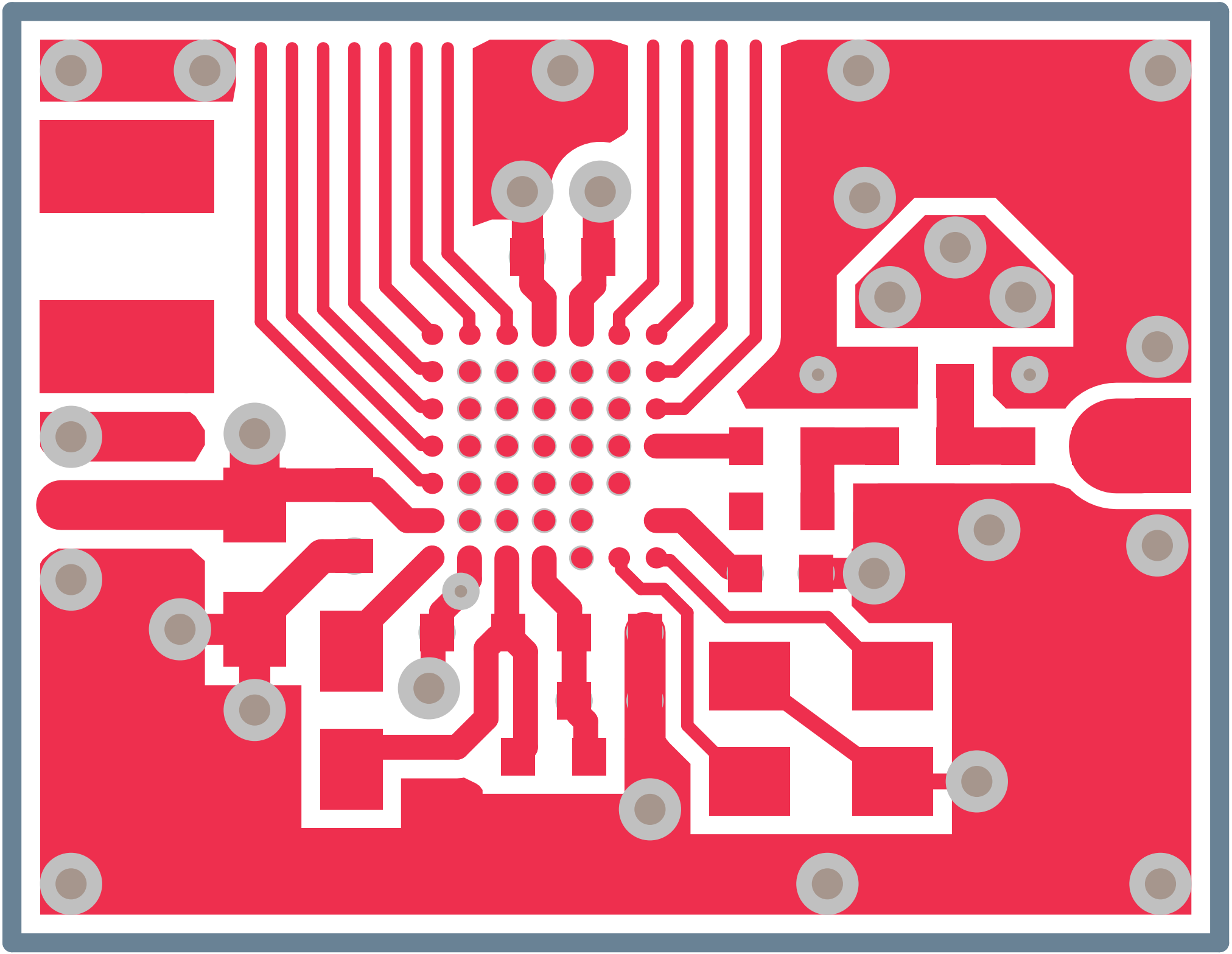

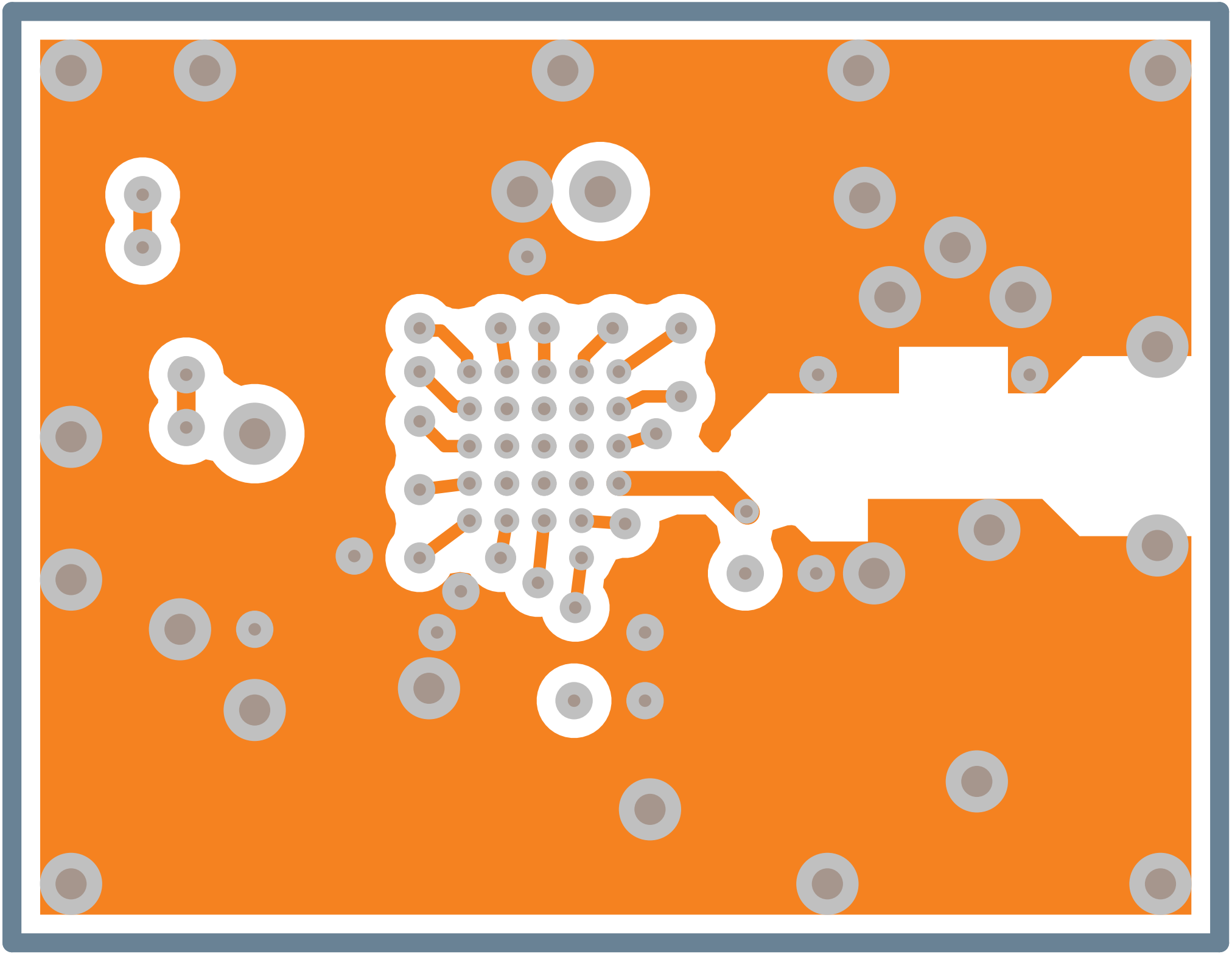

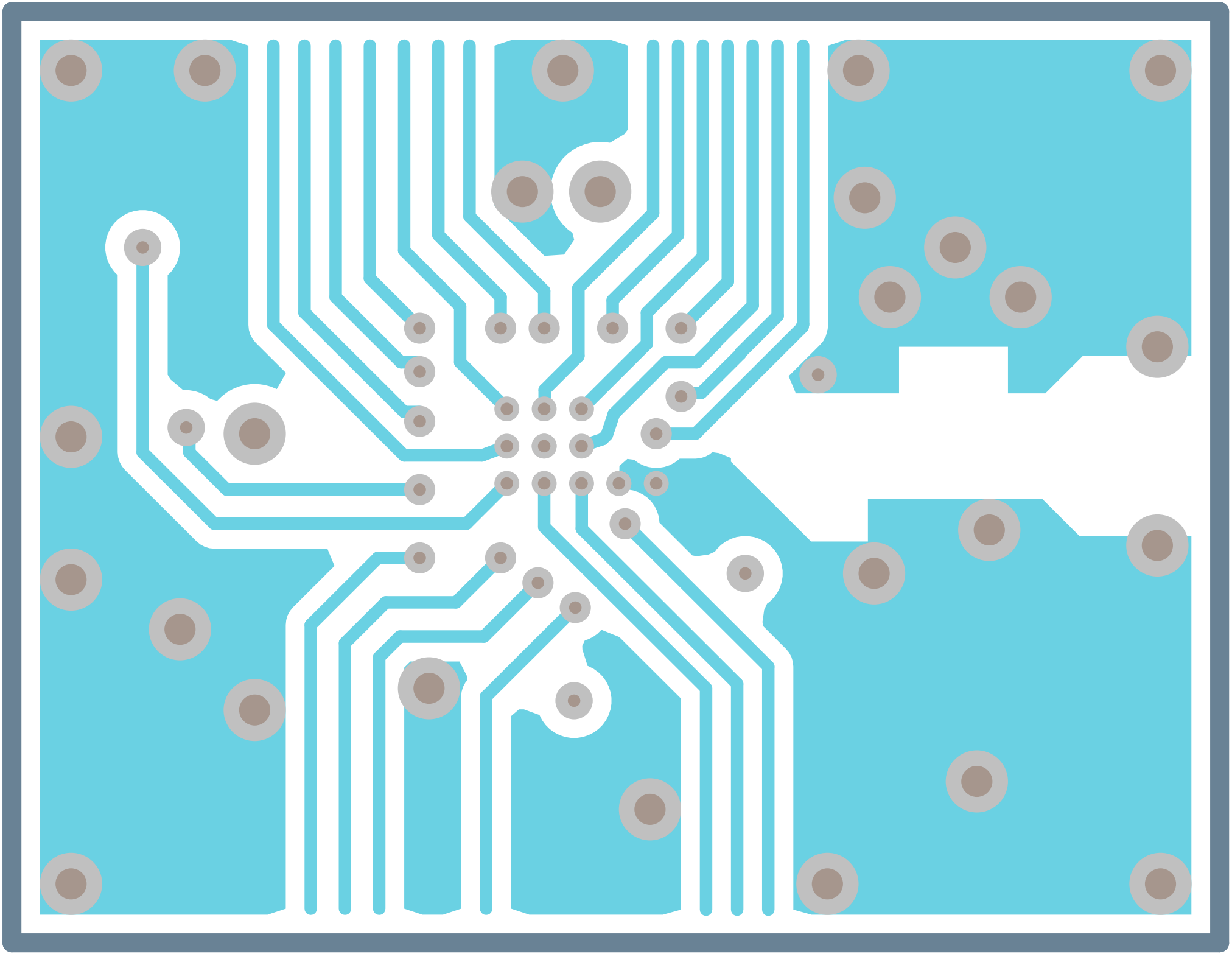

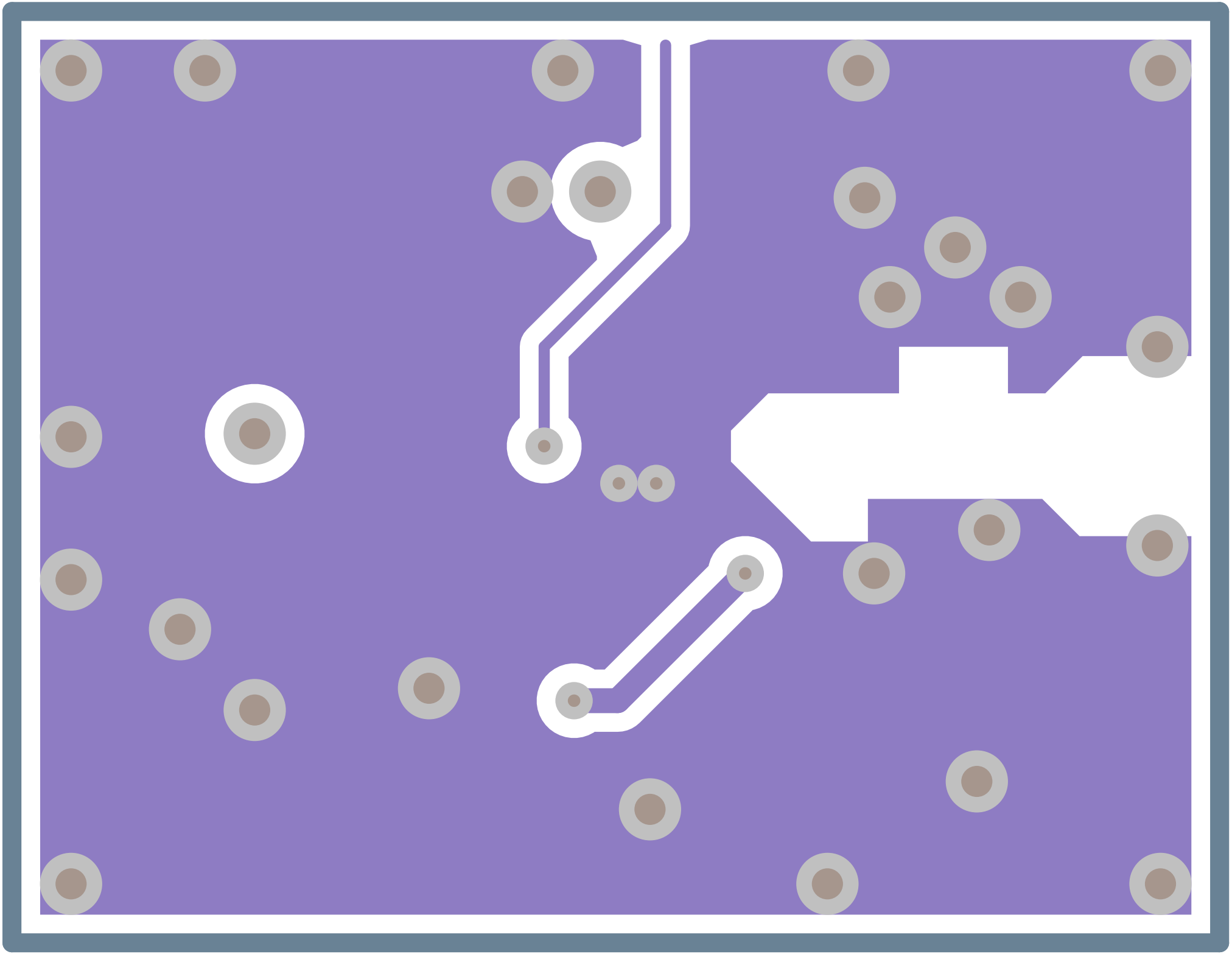

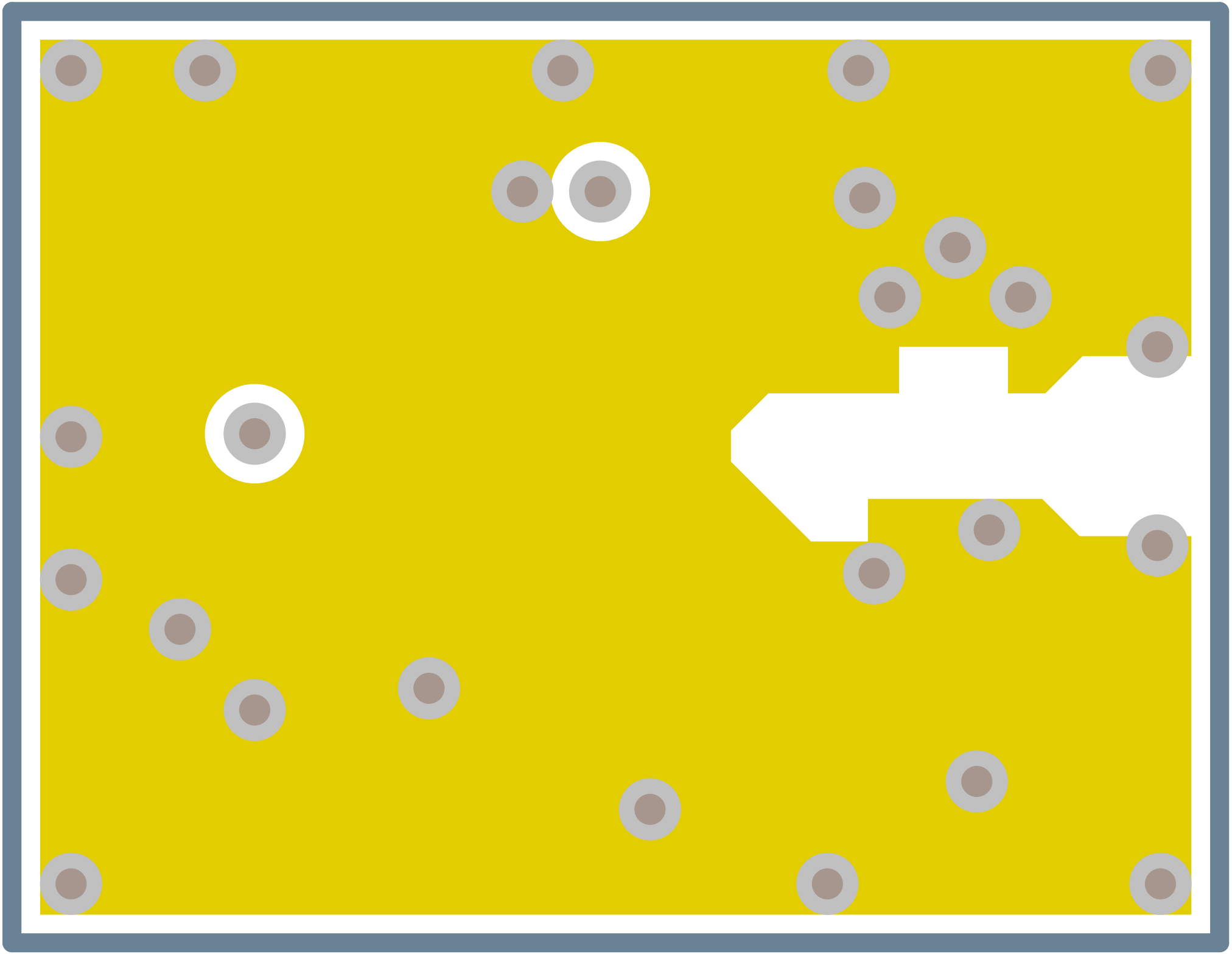

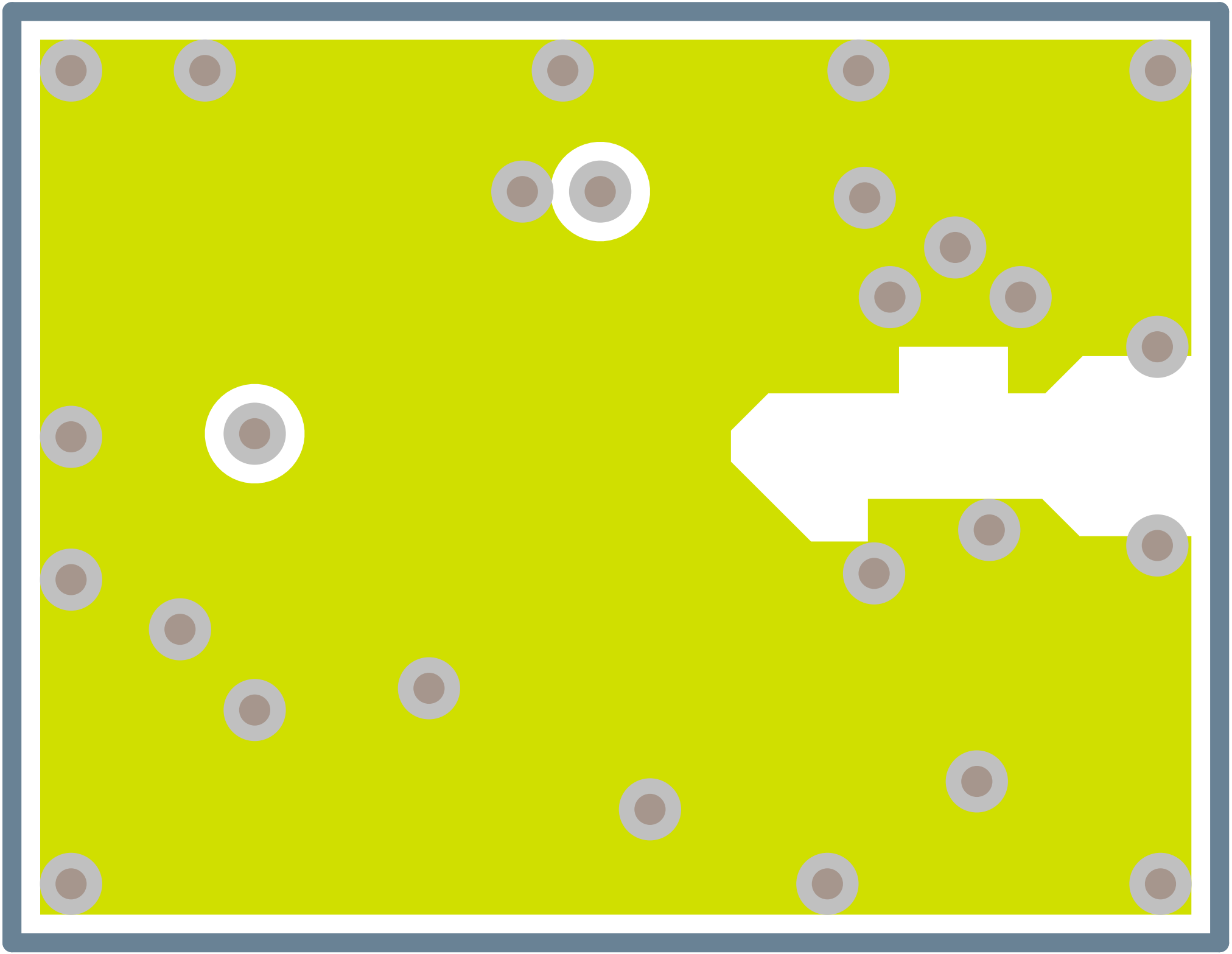

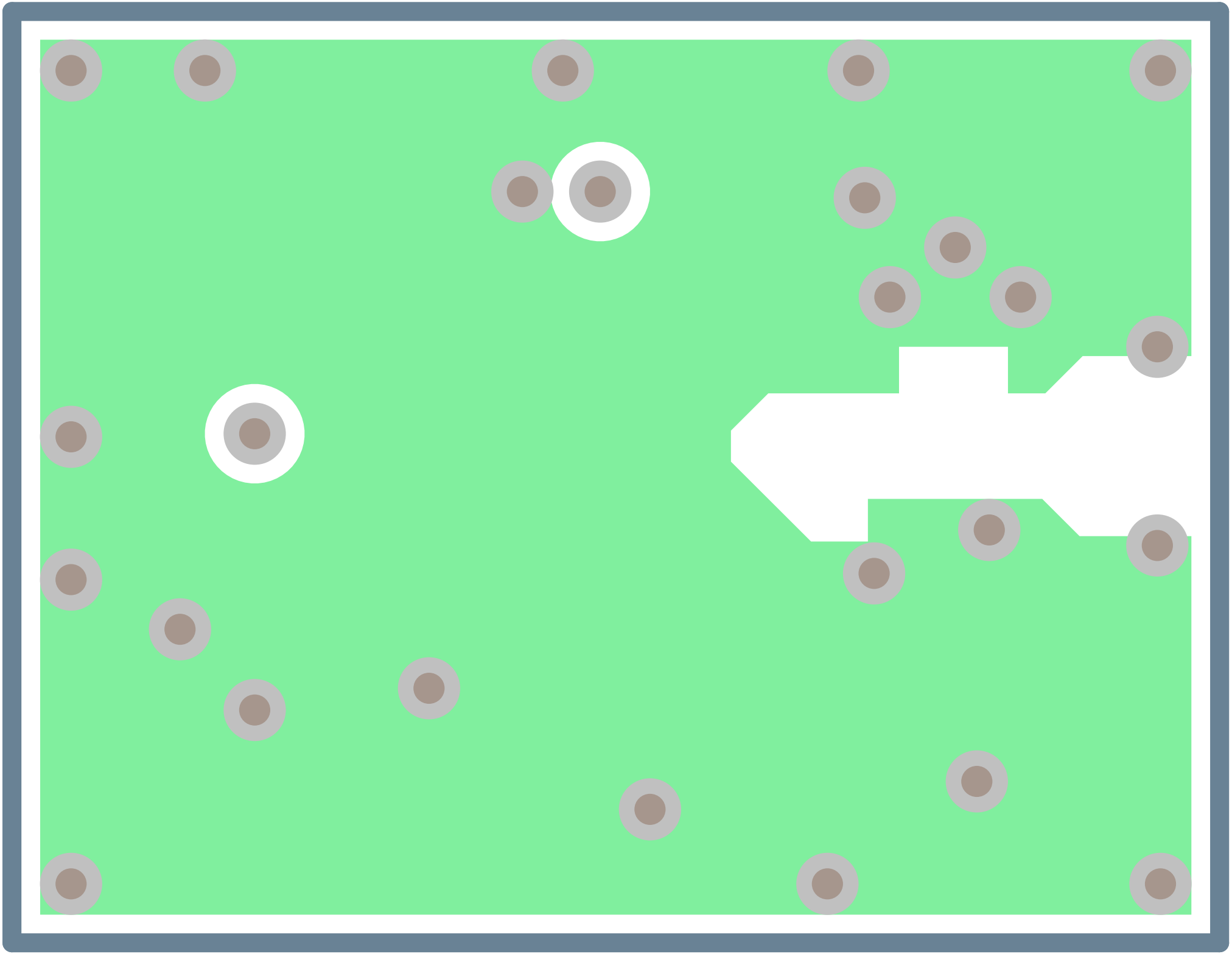

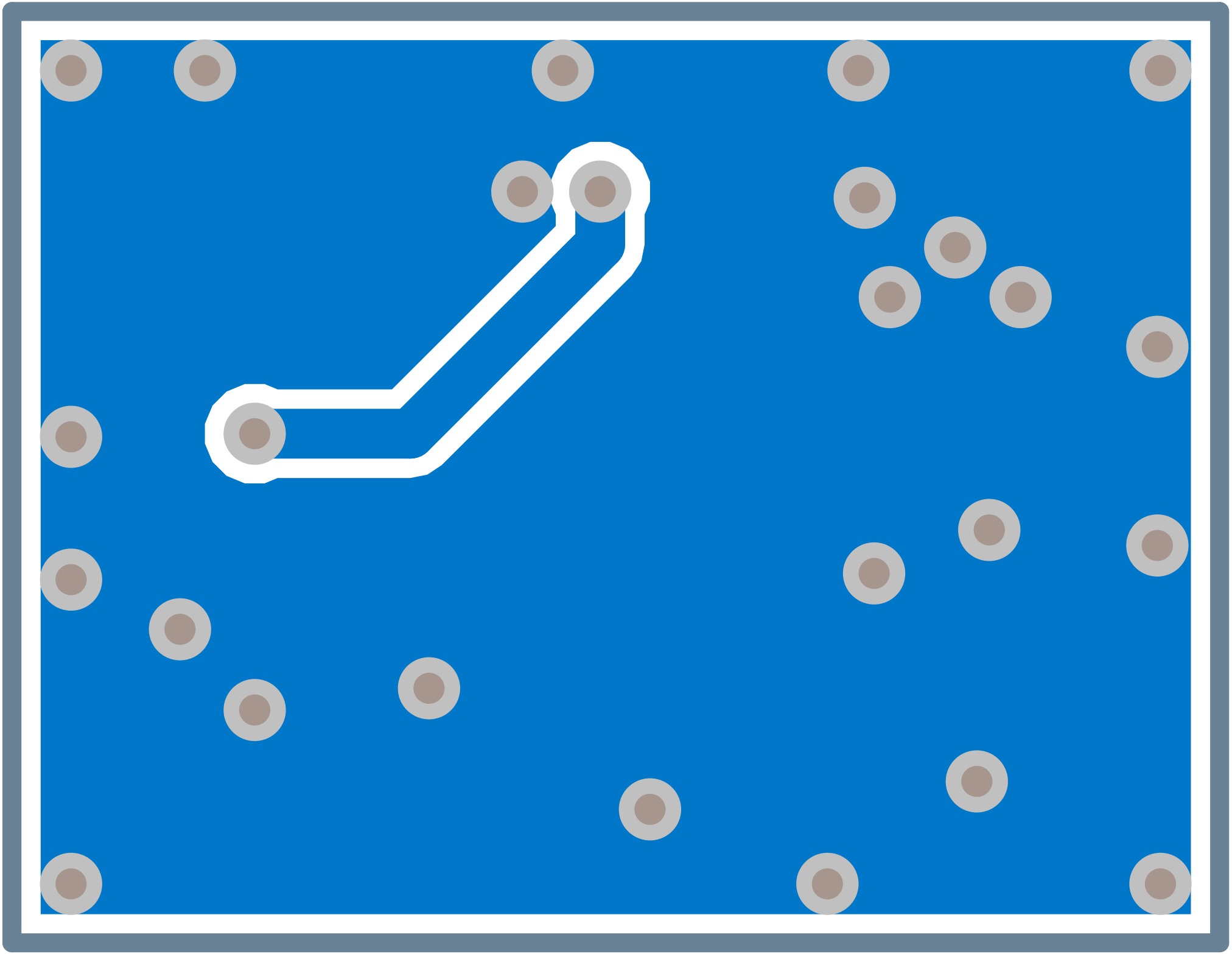

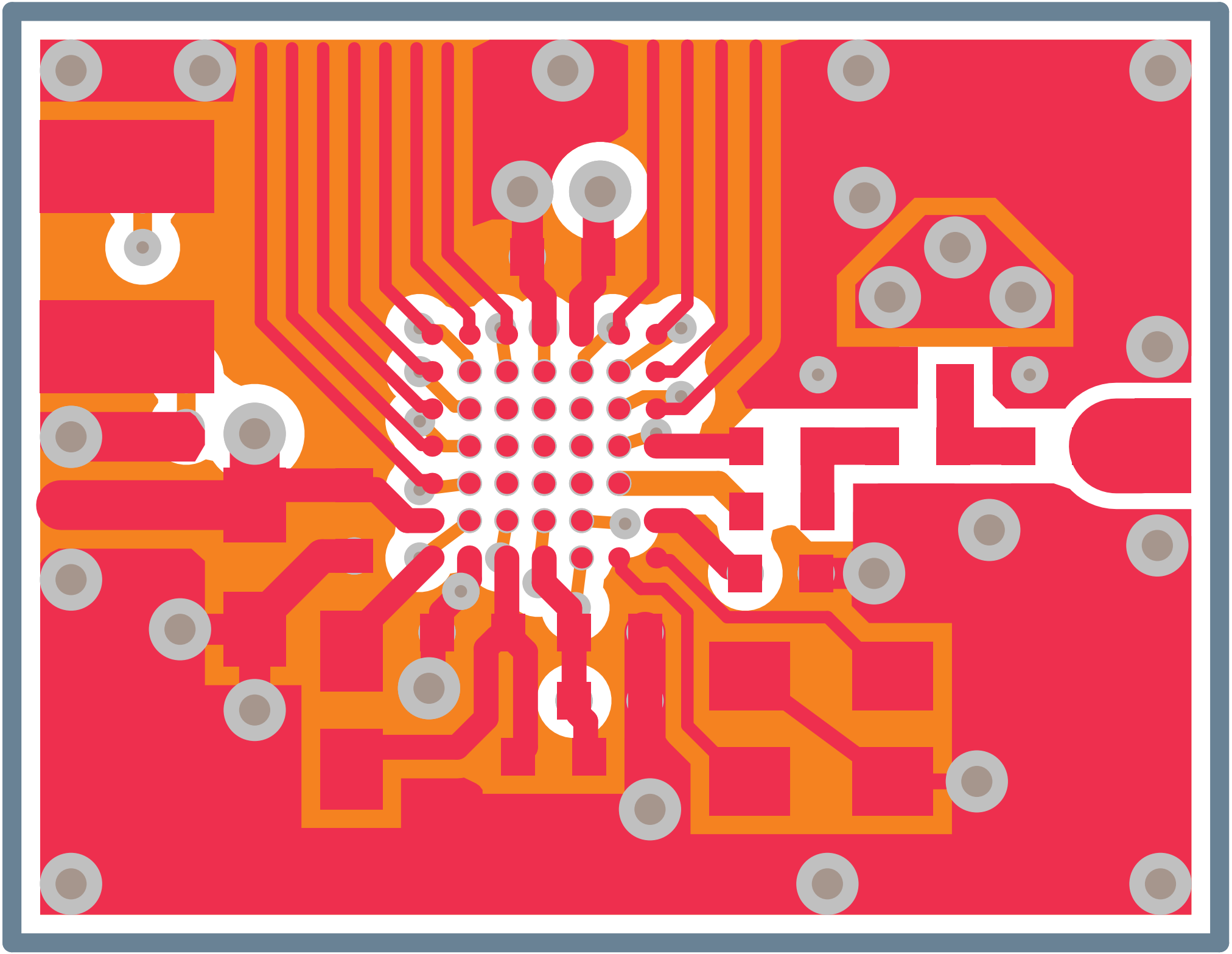

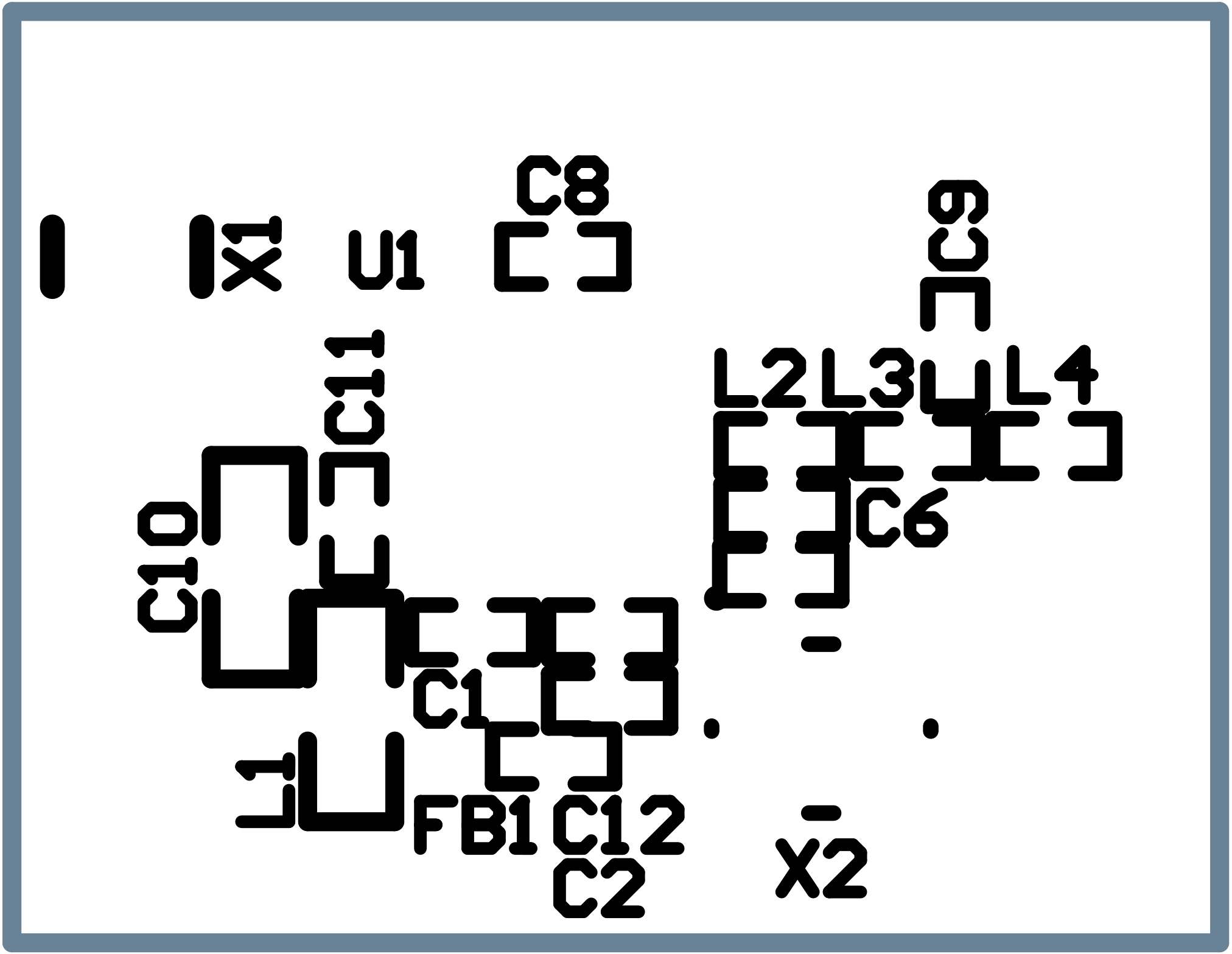
C8
X1
U1
C9
C11
L2
L3
L4
C10
C6
C1
L1
FB1
C12
C2
X2

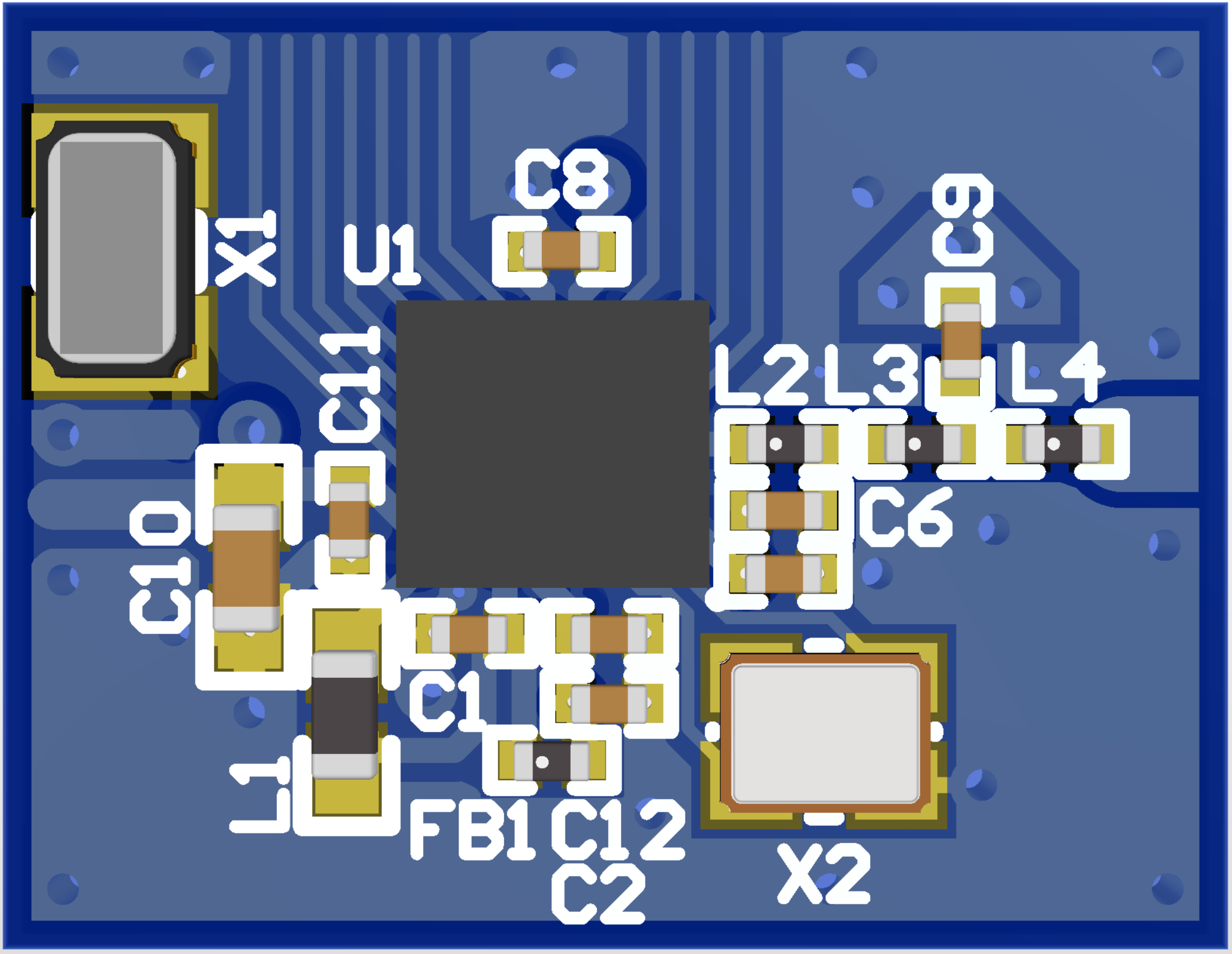
X1
U1
C8
C9
C11
L2
L3
L4
C10
C6
C1
J1
FB1
C12
C2
X2